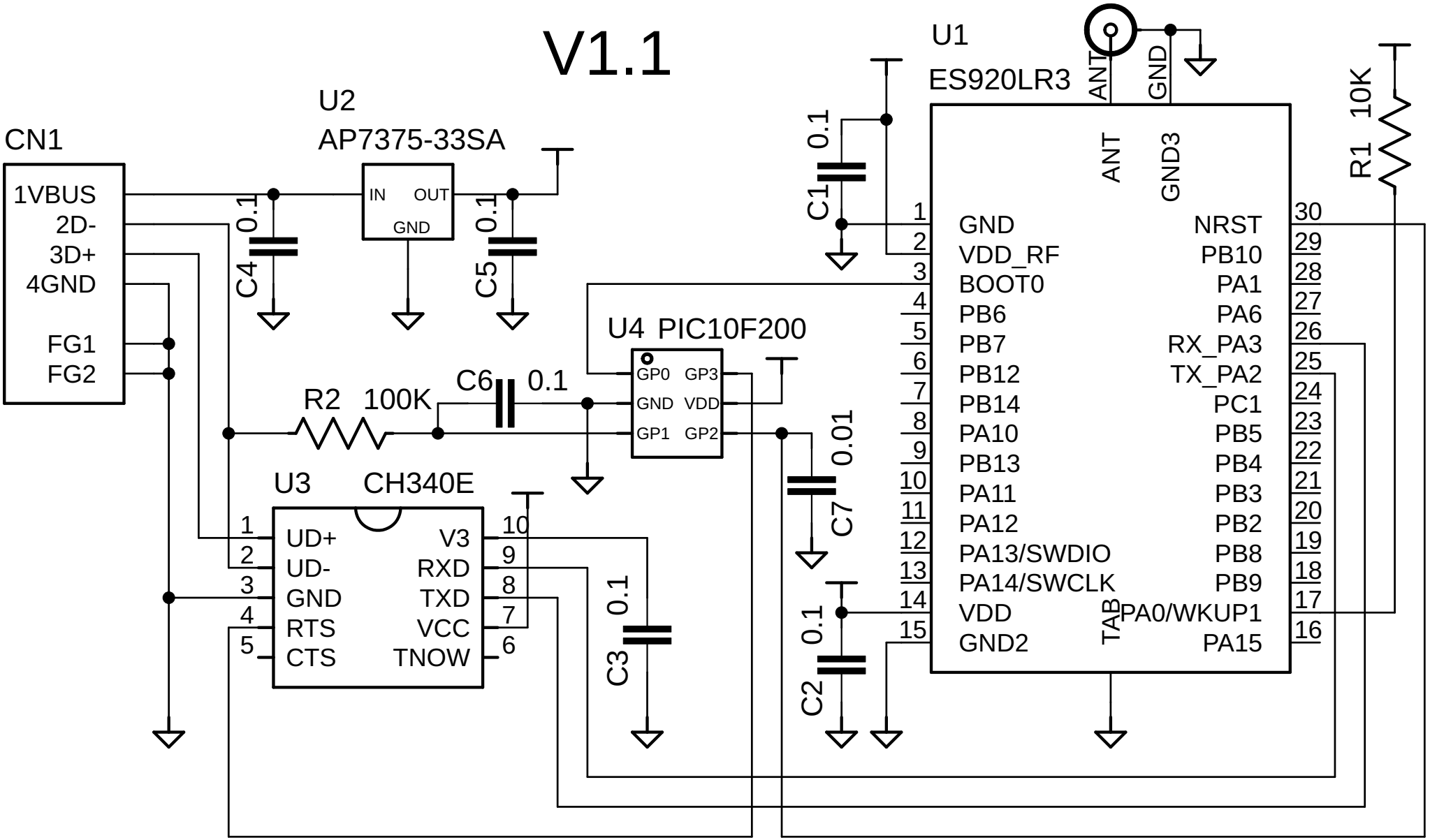
V1.1
CN1
1VBUS
2D-
3D+
4GND
FG1
FG2
U2
AP7375-33SA
IN
OUT
GND
C4 0.1
C5 0.1
R2 100K
C6 0.1
U4 PIC10F200
GP0
GP3
GND
VDD
GP1
GP2
U3 CH340E
UD+
UD-
GND
RTS
CTS
V3
RXD
TXD
VCC
TNOW
C3 0.1
C7 0.01
C1 0.1
C2 0.1
U1
ES920LR3
ANT
GND
GND3
GND
VDD_RF
BOOT0
PB6
PB7
PB12
PB14
PA10
PB13
PA11
PA12
PA13/SWDIO
PA14/SWCLK
VDD
GND2
TAB
NRST
PB10
PA1
PA6
RX_PA3
TX_PA2
PC1
PB5
PB4
PB3
PB2
PB8
PB9
PA0/WKUP1
PA15
R1 10K