温度センサの値を送信

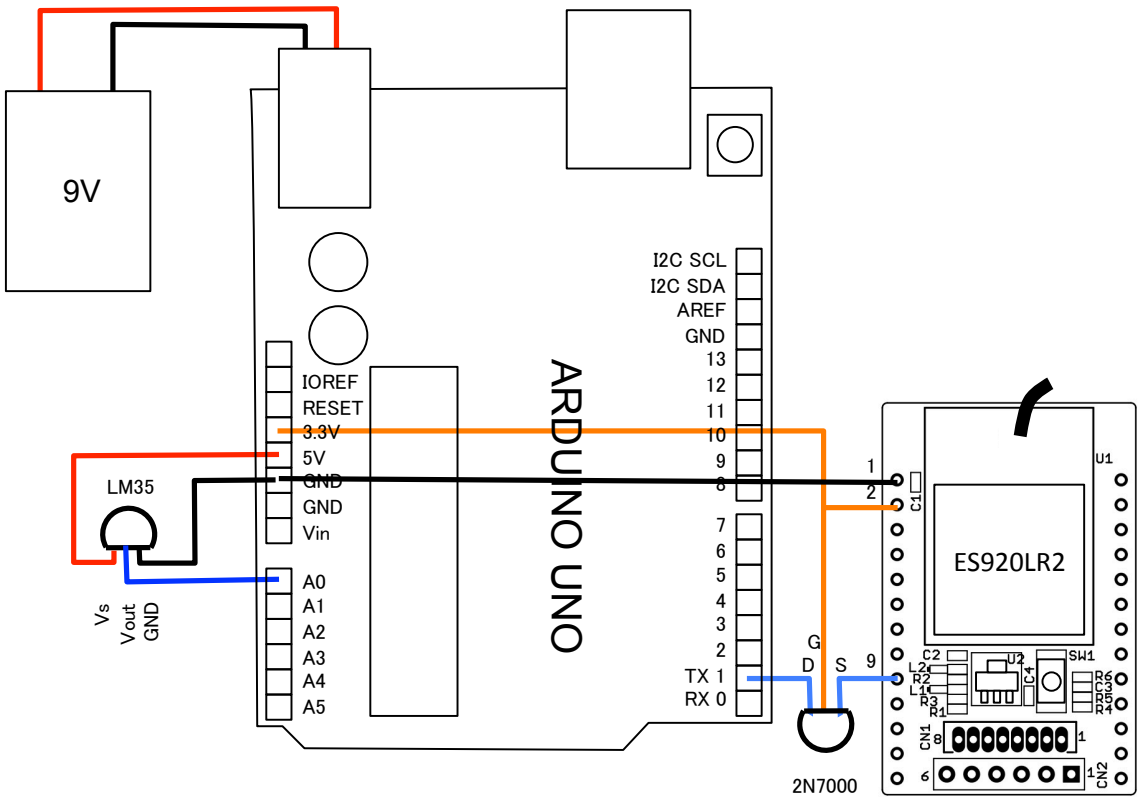


```
int sensorPin = A0;

void setup() {
  Serial.begin(115200);
}

void loop() {
  int sensorValue = analogRead(sensorPin);
  float temp = (float)(sensorValue) * 5 * 100 / 1024;
  Serial.print(temp);
  Serial.print("¥r¥n");
  delay(5000);
}
```