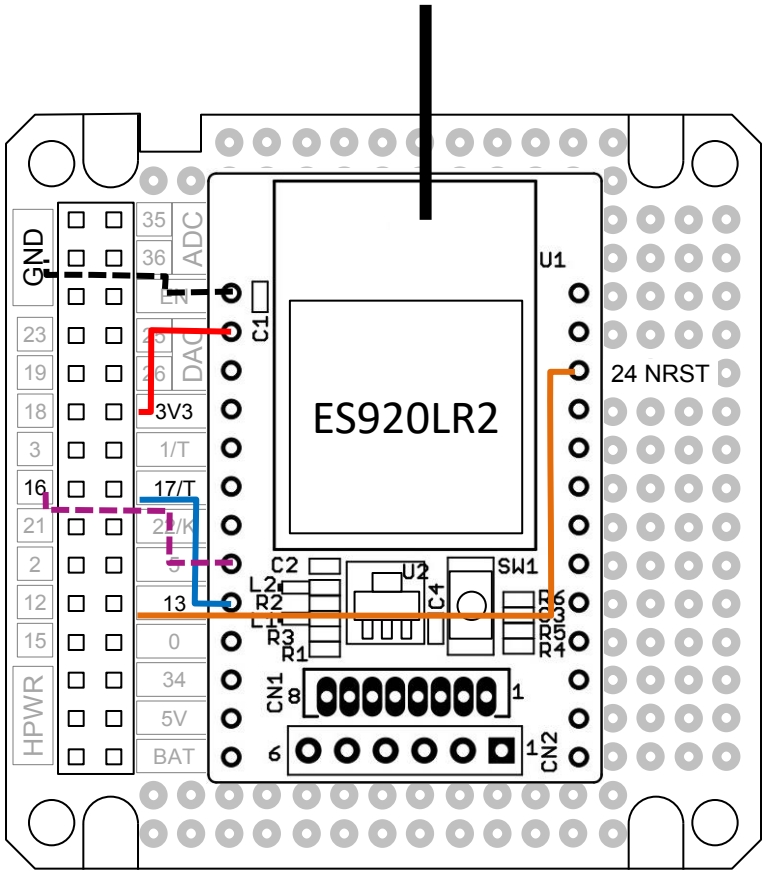
GND
23
19
18
3
16
21
2
12
15
HPWR
35
36
ADC
EN
DAC
3V3
1/T
17/T
21/K
13
0
34
5V
BAT
C1
ES920LR2
U1
24 NRST
C2
L2
R2
L1
R3
R1
U2
C4
SW1
R6
C3
R5
R4
CN1
8
1
6
1
CN2