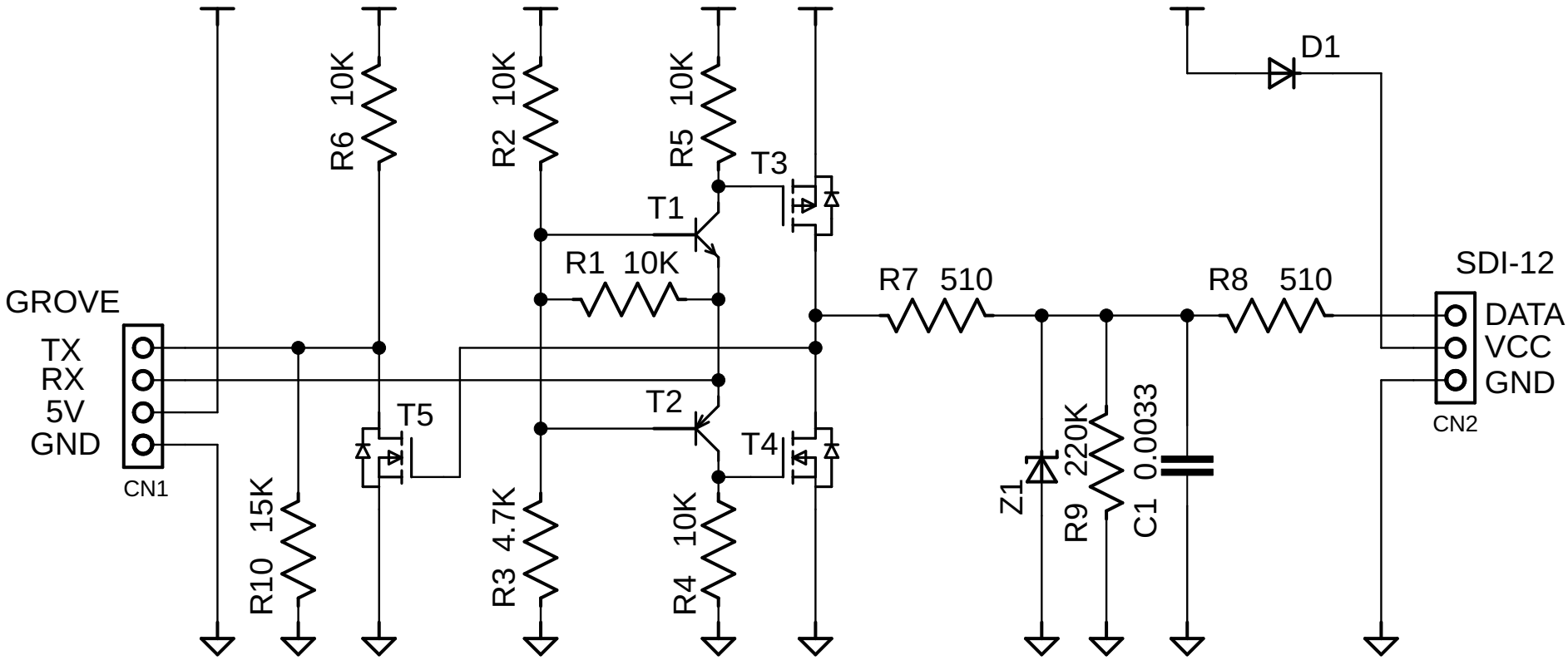
GROVE
TX
RX
5V
GND
CN1
R10 15K
R6 10K
T5
R2 10K
R3 4.7K
R1 10K
T1
T2
R5 10K
R4 10K
T3
T4
R7 510
Z1
R9 220K
C1 0.0033
R8 510
D1
SDI-12
DATA
VCC
GND
CN2