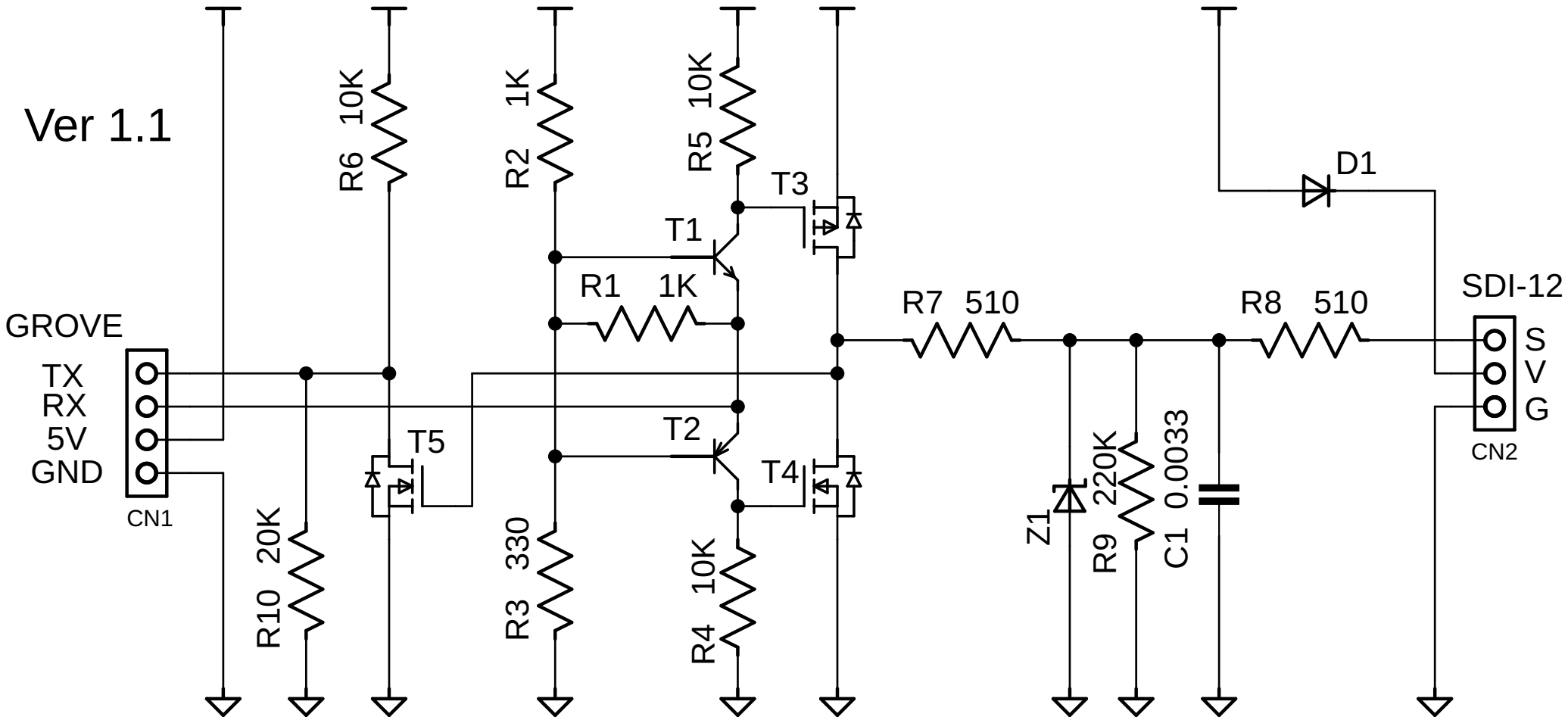
Ver 1.1
GROVE
TX
RX
5V
GND
CN1
R6 10K
R2 1K
R5 10K
T3
T1
R1 1K
T5
T2
T4
R10 20K
R3 330
R4 10K
R7 510
R8 510
D1
Z1
R9 220K
C1 0.0033
SDI-12
S
V
G
CN2