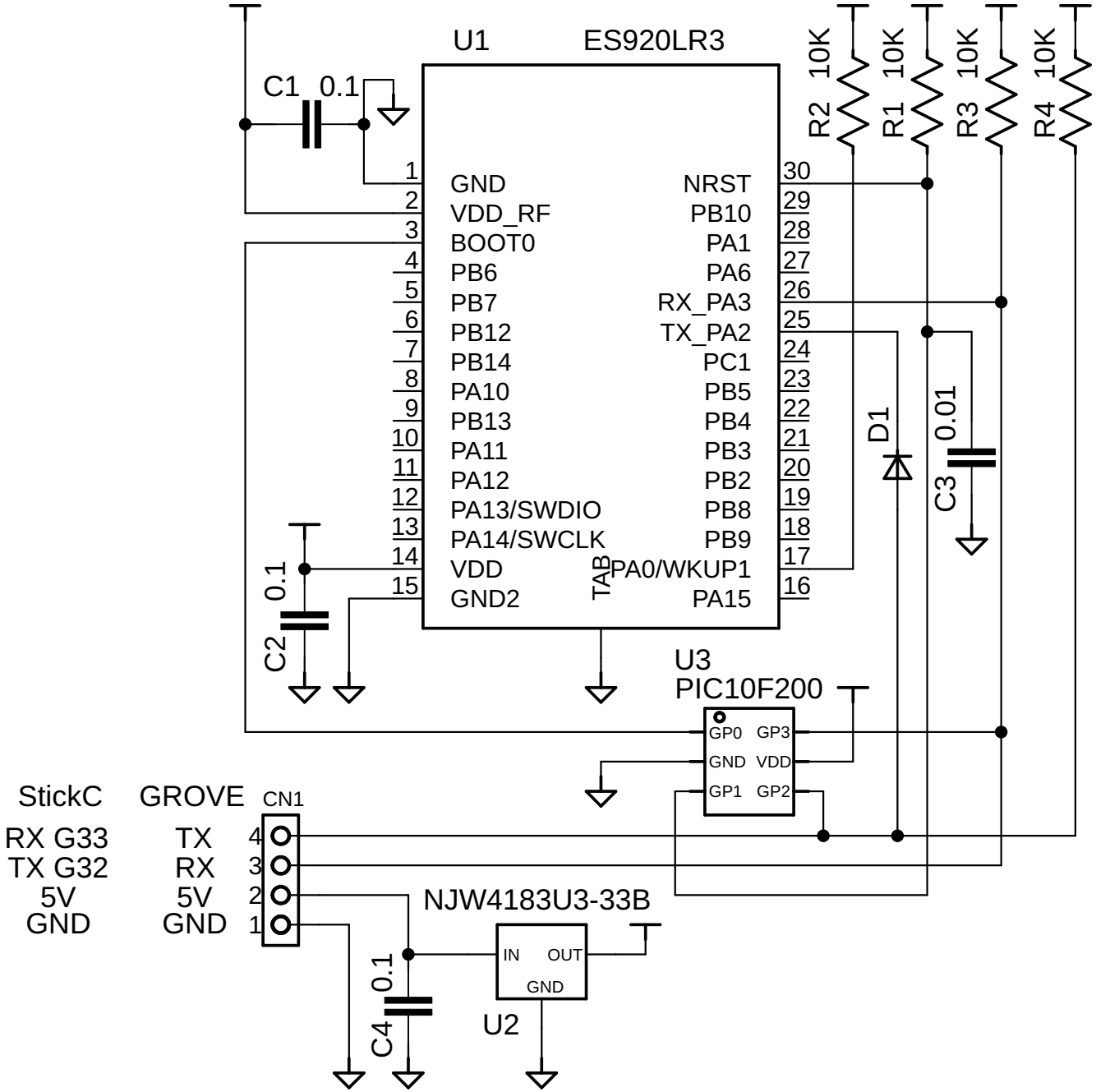
U1
ES920LR3
C1 0.1
R2 10K
R1 10K
R3 10K
R4 10K
1 GND
2 VDD_RF
3 BOOT0
4 PB6
5 PB7
6 PB12
7 PB14
8 PA10
9 PB13
10 PA11
11 PA12
12 PA13/SWDIO
13 PA14/SWCLK
14 VDD
15 GND2
TAB
30 NRST
29 PB10
28 PA1
27 PA6
26 RX_PA3
25 TX_PA2
24 PC1
23 PB5
22 PB4
21 PB3
20 PB2
19 PB8
18 PB9
17 PA0/WKUP1
16 PA15
D1
C3 0.01
C2 0.1
U3
PIC10F200
GP0 GP3
GND VDD
GP1 GP2
StickC
GROVE
CN1
RX G33
TX G32
5V
GND
TX 4
RX 3
5V 2
GND 1
NJW4183U3-33B
IN OUT
GND
U2
C4 0.1